Automated Vehicle Identification

Model Deployment Initiative
Acceptance Test Plan

Version 1.0

SwRI Project No. 10-8684
P.O. No. 7-70030
Req. No. 50115-7-70030

December 5, 1997

Prepared For:
Texas Department of Transportation
TransGuide
3500 NW Loop 410
San Antonio, Texas 78229

Prepared by:
Southwest Research Institute
P.O. Drawer 28510
San Antonio, Texas 78228

Approval Page

MDI AVI Project Manager	Date
SwRI MDI Project Manager	Date
Software Engineering Director	Date

Table of Contents

1. SCOPE **1**

1.1 IDENTIFICATION 1
1.2 SYSTEM OVERVIEW 1
1.3 GOALS AND OBJECTIVES 3
1.4 REFERENCED DOCUMENTS 3

2. ACCEPTANCE TEST METHODS AND PROCEDURES **4**

2.1 TEST IDENTIFICATION 4
2.2 TEST CASE DESIGN 4
2.3 PROBLEM REPORTING 5
2.4 AVI-PYS 7
2.4.1 Hardware Preparation *7*
2.4.2 Software Preparation *7*
2.4.3 Other Pre-Test Preparation *7*
2.4.4 Test Descriptions *7*
2.4.4.1 AVI-PYS-1 7
2.4.4.1.1 Requirements Addressed 7
2.4.4.1.2 Prerequisite Conditions 7
2.4.4.1.3 Test Inputs 7
2.4.4.1.4 Test Results Evaluation 8
2.4.4.1.5 Test Procedure 8
2.4.4.1.6 Assumptions and Constraints 8
2.4.4.1.7 Test Results 9
2.5 AVI-READ 10
2.5.1 Hardware Preparation *10*
2.5.2 Software Preparation *10*
2.5.3 Other Pre-Test Preparation *10*
2.5.4 Test Descriptions *10*
2.5.4.1 AVI-READ-1 10
2.5.4.1.1 Requirements Addressed 10
2.5.4.1.2 Prerequisite Conditions 10
2.5.4.1.3 Test Inputs 10
2.5.4.1.4 Test Results Evaluation 11
2.5.4.1.5 Test Procedure 11
2.5.4.1.6 Assumptions and Constraints 11
2.5.4.1.7 Test Results 11
2.6 AVI-CALC 12
2.6.1 Hardware Preparation *12*
2.6.2 Software Preparation *12*
2.6.3 Other Pre-Test Preparation *12*
2.6.4 Test Descriptions *12*
2.6.4.1 AVI-CALC-1 12
2.6.4.1.1 Requirements Addressed 12
2.6.4.1.2 Prerequisite Conditions 13
2.6.4.1.3 Test Inputs 13
2.6.4.1.4 Test Results Evaluation 13
2.6.4.1.5 Test Procedure 15
2.6.4.1.6 Assumptions and Constraints 16
2.6.4.1.7 Test Results 16
2.7 AVI-CONFIG 17

2.7.1 Hardware Preparation *17*
2.7.2 Software Preparation *17*
2.7.3 Other Pre-Test Preparation *17*
2.7.4 Test Descriptions *17*
2.7.4.1 AVI-CONFIG-1 17
2.7.4.1.1 Requirements Addressed 17
2.7.4.1.2 Prerequisite Conditions 17
2.7.4.1.3 Test Inputs 18
2.7.4.1.4 Test Results Evaluation 18
2.7.4.1.5 Test Procedure 21
2.7.4.1.6 Assumptions and Constraints 24
2.7.4.1.7 Test Results 24
2.8 AVI-STATUS 25
2.8.1 Hardware Preparation *25*
2.8.2 Software Preparation *25*
2.8.3 Other Pre-Test Preparation *25*
2.8.4 Test Descriptions *25*
2.8.4.1 AVI-STATUS-1 25
2.8.4.1.1 Requirements Addressed 25
2.8.4.1.2 Prerequisite Conditions 26
2.8.4.1.3 Test Inputs 26
2.8.4.1.4 Test Results Evaluation 26
2.8.4.1.5 Test Procedure 27
2.8.4.1.6 Assumptions and Constraints 28
2.8.4.1.7 Test Results 28
2.8.4.2 AVI-STATUS-2 29
2.8.4.2.1 Requirements Addressed 29
2.8.4.2.2 Prerequisite Conditions 29
2.8.4.2.3 Test Inputs 29
2.8.4.2.4 Test Results Evaluation 29
2.8.4.2.5 Test Procedure 29
2.8.4.2.6 Assumptions and Constraints 30
2.8.4.2.7 Test Results 30
2.8.4.3 AVI-STATUS-3 31
2.8.4.3.1 Requirements Addressed 31
2.8.4.3.2 Prerequisite Conditions 31
2.8.4.3.3 Test Inputs 31
2.8.4.3.4 Test Results Evaluation 31
2.8.4.3.5 Test Procedure 31
2.8.4.3.6 Assumptions and Constraints 32
2.8.4.3.7 Test Results 32
2.8.4.4 AVI-STATUS-4 33
2.8.4.4.1 Requirements Addressed 33
2.8.4.4.2 Prerequisite Conditions 33
2.8.4.4.3 Test Inputs 33
2.8.4.4.4 Test Results Evaluation 33
2.8.4.4.5 Test Procedure 33
2.8.4.4.6 Assumptions and Constraints 34
2.8.4.4.7 Test Results 34

3. REQUIREMENTS TRACEABILITY 35

APPENDIX A: ROLLING-AVERAGE WINDOW 38

APPENDIX B: AVI DATA SIMULATOR 40

List of Figures

FIGURE 1. AUTOMATED VEHICLE IDENTIFICATION SYSTEM ARCHITECTURE 2
FIGURE 2. AUTOMATED VEHICLE IDENTIFICATION MASTER COMPUTER SOFTWARE CONTEXT DIAGRAM.....3

List of Tables

TABLE 1. TAG READS FOR READER 1 14
TABLE 2. TAG READS FOR READER 2 14
TABLE 3. TAG MATCHES 15
TABLE 4. EXPECTED ROLLING AVERAGE OUTPUT 15
TABLE 5. TAG READS FOR READER 1 19
TABLE 6. TAG READS FOR READER 2 19
TABLE 7. TAG MATCHES 20
TABLE 8. EXPECTED ROLLING AVERAGE OUTPUT FOR ROLLING AVERAGE = 20 20
TABLE 9. EXPECTED ROLLING AVERAGE OUTPUT FOR ROLLING AVERAGE = 60 21
TABLE 10. TAG MATCH TABLE FOR LINK IN0035I-RANDO-WALZE 38

Acronym List

ATMS	Advanced Traffic Management System
ATIS	Advanced Traveler Information System
ATP	Acceptance Test Plan
AVI	Automated Vehicle Identification
DS	DataServer
GB	Gigabyte
GUI	Graphical User Interface
Hz	Hertz
IVN	In-Vehicle Navigation
ITS	Intelligent Transportation Systems
MB	Megabyte
MC	Master Computer
MCS	Master Computer System
MDI	Model Deployment Initiative
MHz	Megahertz
RAM	Random Access Memory
RFO	Request For Offer
RFS	Reader Field Site
SCSI	Small Computer System Interface
SwRI	Southwest Research Institute
TTI	Texas Transportation Institute
TxDOT	Texas Department of Transportation

Automated Vehicle Identification
Acceptance Test Plan

1. Scope

This Acceptance Test Plan (ATP) is developed to provide the acceptance criteria and tests for the Automated Vehicle Identification (AVI) Project of the Model Deployment Initiative (MDI). The basis for the development of this ATP document is the *Automated Vehicle Identification Model Deployment Initiative Preliminary Design Document, Version 1.0*.

1.1 Identification

This ATP is developed for testing the AVI applications of the AVI System Version 1.0. These applications will be identified in the *Automated Vehicle Identification Model Deployment Initiative Version Description Document, Version 1.0*.

1.2 System Overview

The AVI System is one of several systems being developed for the MDI program. The system will be an important source of real-time traffic data for other MDI systems as well as the TransGuide Advanced Traffic Management System (ATMS) and the TransGuide Advanced Traveler Information System (ATIS).

ATMS systems rely on real-time traffic data to detect incidents, monitor traffic flow, and inform the public. Data is traditionally collected by placing sensors in the road to measure the speed and volume of vehicles as they travel past the sensor. While this *point speed* data is very useful in determining traffic conditions at a particular point, it is not useful in determining the traffic conditions between points where the sensors are located.

A much more sophisticated measurement would be the determination of *travel time* between two instrumented points. Unlike the point speed data, travel time data contains information about traffic delays that occur between two points. These delays can be caused by several things including accidents, traffic signals, or construction.

The AVI System is intended to address the shortcoming of point speed detection methods by determining travel times between specific locations throughout the city. This higher quality data can then be used as a source of real-time traffic data in the TransGuide ATMS system, the TransGuide ATIS system, and other MDI systems such as the In-Vehicle Navigation (IVN) system and Traveler Information Kiosk system.

The AVI System consists of several thousand vehicle tags (AVI Tags), the several AVI Reader Field Sites, and a collection of computer hardware and software called the AVI Data Processing System. shows the architecture of the AVI System with each of these components.

The software of the AVI Data Processing System is referred to as the AVI Master Computer Software. This software executes on the AVI Master Computer. The context diagram for the AVI Master Computer Software is presented in Figure 2. This diagram contains the AVI Master Computer Software System, the external systems to which it interfaces, and the data flows between the systems.

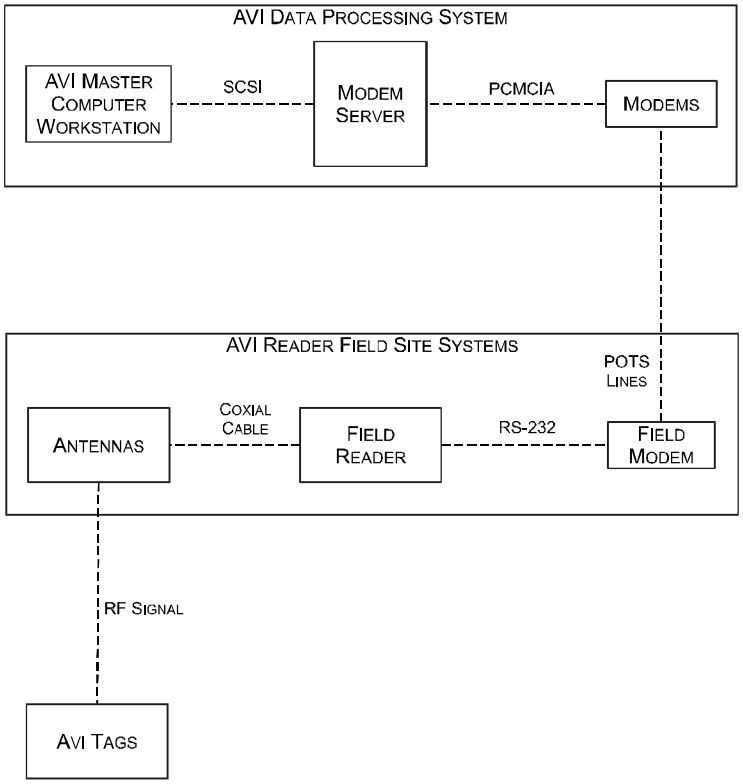

FIGURE 1. AUTOMATED VEHICLE IDENTIFICATION SYSTEM ARCHITECTURE

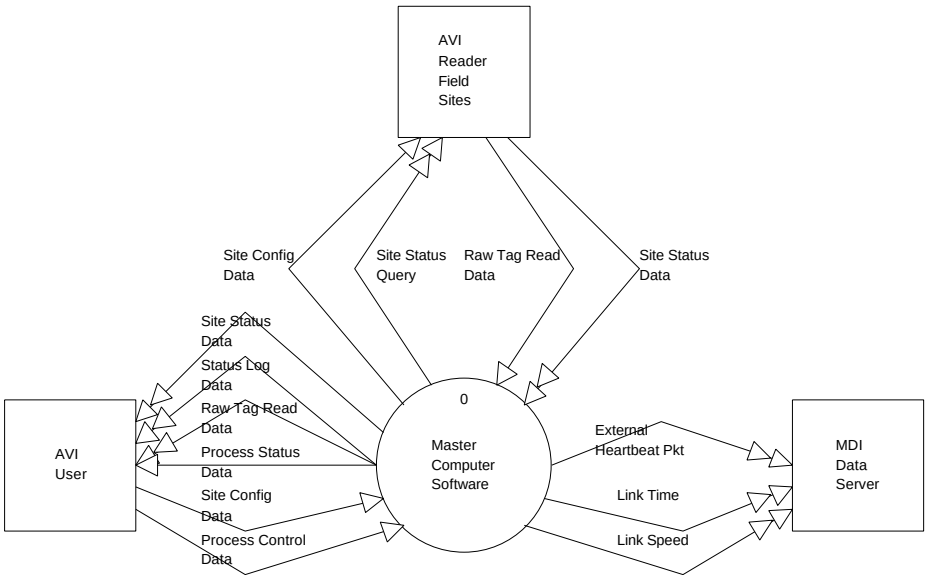

FIGURE 2. AUTOMATED VEHICLE IDENTIFICATION MASTER COMPUTER SOFTWARE CONTEXT DIAGRAM

1.3 Goals and Objectives

The AVI System has the following goals. The system should:

- provide real-time traffic condition information,
- provide data that can be used by traffic management personnel to manage traffic,
- provide data that can be used by the traveling public,
- be flexible to allow additional sensors in the future,
- provide easy system diagnosis and configuration, and
- process data in a timely manner to make the data available in a real-time fashion.

1.4 Referenced Documents

Southwest Research Institute, *Proposal for the Model Deployment Initiative System Integration*, SwRI Proposal No. 10-20352, November 1996.

Southwest Research Institute, *Automated Vehicle Identification Model Deployment Initiative Preliminary Design Document*, Version 1.0, February 1997.

Southwest Research Institute, *DataServer Model Deployment Initiative Acceptance Test Plan*, Version 1.0, October 1997.

Southwest Research Institute, *Automated Vehicle Identification Model Deployment Initiative Software Development Plan*, Version 1.0, April 1997.

Texas Department of Transportation, *Request for Offer (RFO) for the Model Deployment Initiative System Integration, 60115-7-70030*, Specification No. TxDOT 795-SAT-01, October 1996.

2. Acceptance Test Methods and Procedures

This section describes the test methods and procedures for executing the AVI ATP. The test cases to be completed during execution of this ATP have been designed to demonstrate that the AVI System meets the requirements specified in the AVI MDI Preliminary Design Document. Each of these requirements are further documented in Section 3 in the traceability matrix. For each requirement, the matrix contains traceability information to show the relationship between the AVI requirements, the source for those requirements, and test cases documented in this ATP.

2.1 Test Identification

The ATP is divided into individual test cases that are grouped by function. Each test case includes a synopsis of the function being tested, the requirements being verified, a description of the AVI system components and special test configurations, the test protocol, and an appropriate space for recording test results. The tests are identified with a project unique identifier. This identifier has the following format:
<System Mnemonic>-<Subsystem Mnemonic>-<Test Number>

System Mnemonic
The system mnemonic uniquely identifies the AVI system to distinguish its acceptance tests from the tests of the other MDI systems. The system mnemonic for the AVI System is *AVI.*

Subsystem Mnemonic
The mnemonics for each set of subsystem tests are:

PYS - Physical configuration

READ - Read AVI data

CALC - Calculate travel time and travel speed

CONFIG - AVI System configuration

STATUS - AVI System status

Test Number
The tests are numbered sequentially within a given test.

2.2 Test Case Design

The goal of this ATP is to demonstrate the capability of the AVI system in its operational environment and to validate that it meets Texas Department of Transportation (TxDOT) requirements. Test cases contained in this ATP have been derived from the requirements contained in the *Automated Vehicle Identification Model Deployment Initiative Preliminary Design Document.* A "black box" testing strategy is used to discover faults of omission by identifying which requirements have and have not been fulfilled. Execution of test cases will follow the order defined in the ATP. The AVI system will be tested using real-world data when available; however, it will be necessary to use an AVI system test configuration for selected test cases. Figure 2 shows the various types of equipment that will be used throughout the ATP. Each test will utilize some or all of these components.

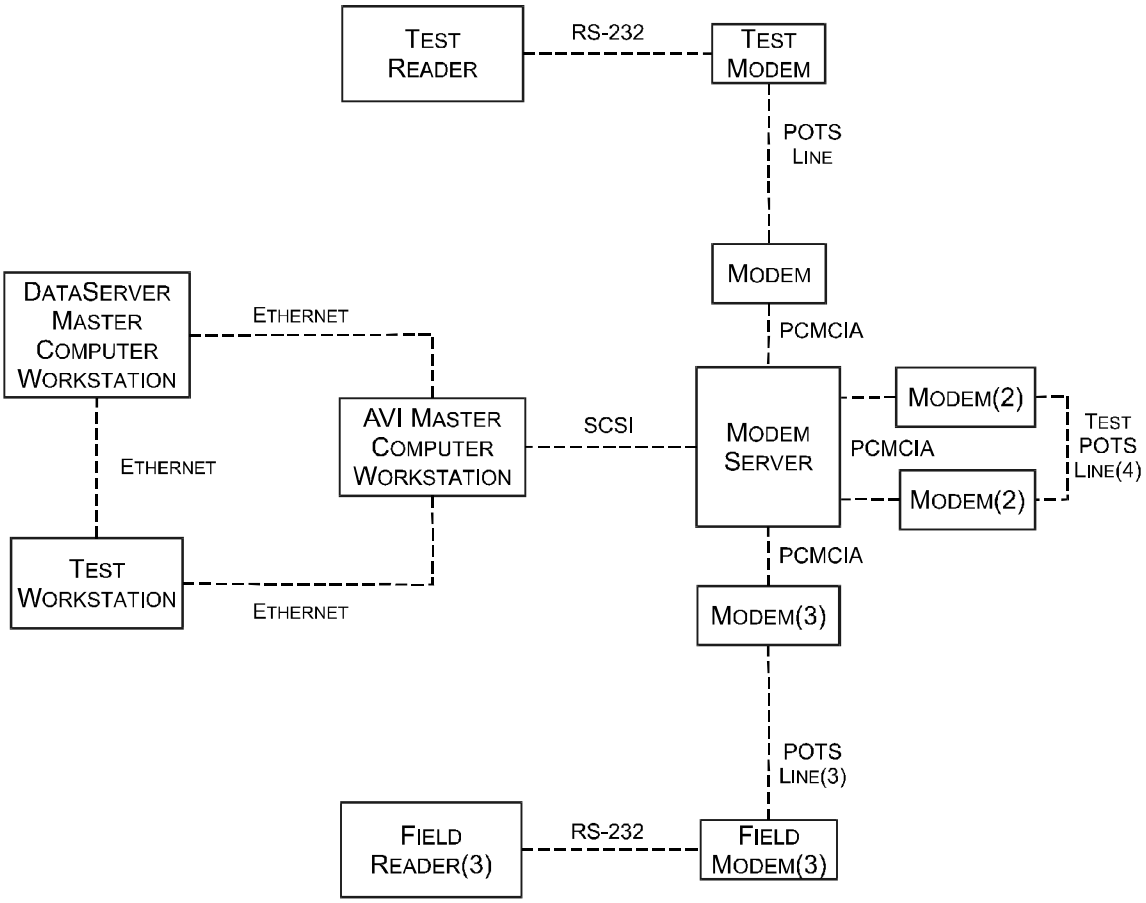

FIGURE 2. AUTOMATED VEHICLE IDENTIFICATION SYSTEM TEST CONFIGURATION

Test cases will be implemented using one or more of the following qualification methods:

- Inspection. The visual examination of computer code, documentation, hardware, data files, etc.
- Demonstration. The operation of the system, or a part of the system, that relies on observable functional operation not requiring the use of instrumentation, special test equipment, or subsequent analysis.
- Test. The operation of the system, or a part of the system, using instrumentation or other special test equipment to collect data for later analysis.
- Analysis. The process of accumulating data obtained from other qualification methods. Examples are reduction, interpretation, or extrapolation of test results.

2.3 Problem Reporting

Problems detected during execution of the AVI ATP will be classified by category as follows:

- Software problem. The software does not operate according to the specified requirements and the requirements are correct.
- Hardware problem. The hardware does not operate according to the specified requirements and the requirements are correct.

- Documentation problem. The software/hardware does not operate according to the specified requirements but the software/hardware operation is correct.
- Design problem. The software/hardware operates according to the specified requirements but a design deficiency exists. The design deficiency may not always result in a direct observable operational problem but possesses the potential for creating further problems.

Problems detected during execution of the AVI ATP will be classified by priority as follows:

- Priority 1: A problem that prevents the accomplishment of a specified requirement.
- Priority 2: A problem that results in user/operator inconvenience or annoyance but does not affect a specified requirement.
- Priority 3: Any other effect.

Priority 1 problems will be corrected and retested prior to final acceptance of this ATP. Priority 2 and Priority 3 problems will be documented for resolution at a later time. Retesting will consist of repeating a subset of the test cases after software corrections have been made to correct problems found in previous testing. Retesting will be considered complete if the test cases that revealed problems in the previous testing have been repeated and the results have met acceptance criteria, and the test cases that revealed no problems during the previous testing, but include functions affected by the corrections, have been repeated and the results have met acceptance criteria.

2.4 AVI-PYS

This test verifies physical requirements for the AVI Data Processing System.

2.4.1 Hardware Preparation

Hardware installed in operating configuration.

2.4.2 Software Preparation

None.

2.4.3 Other Pre-Test Preparation

None.

2.4.4 Test Descriptions

The following test case is implemented under this test:

AVI-PYS-1 Verifies the physical requirements for the AVI System hardware components.

2.4.4.1 AVI-PYS-1

This test case verifies the physical requirements for the AVI Data Processing System.

2.4.4.1.1 Requirements Addressed

AVI-PY-1 The AVI System shall have a dedicated master computer.

AVI-PY-1.1 The AVI Master Computer shall be a Sun Microsystems Ultra SPARCStation or better.

AVI-PY-1.2 The AVI Master Computer shall have, at a minimum, the following items:

- 167mhz SPARC CPU
- 4.2 GB Hard Disk
- 128 MB RAM
- Floppy Disk Drive
- Sun CD-ROM drive
- Turbo GX+ Graphics card
- 20” Sun color monitor
- 2 Ethernet cards
- 2 SCSI channels
- 2 RS-232 ports
- Keyboard
- 2-Button mouse
- 64 serial ports (SCSI attached)
- 1 modem/site

AVI-PY-2 The AVI Data Processing System shall have a modem pool.

2.4.4.1.2 Prerequisite Conditions

- Hardware installed.

2.4.4.1.3 Test Inputs

None.

2.4.4.1.4 Test Results Evaluation

Results will be validated through inspection and demonstration. Since TxDOT procured the AVI Master Computer hardware, TxDOT will be responsible for resolving any issues that arise if the equipment does not meet the physical requirements.

2.4.4.1.5 Test Procedure

1. Open a window on the AVI Master Computer.
2. Enter the UNIX command *dmesg* in the window.
3. Inspect the output of the command, and verify that the line starting with 'cpu…' specifies a 167MHz SPARC CPU or better.
4. Inspect the same output, and verify that the line starting with 'mem…' specifies at least 128 MB of memory.
5. Inspect the same output, and verify that there are at least two (2) Ethernet interfaces (lines that contain one of the strings 'be0', 'hme0', 'tp0' or 'le0').
6. Enter the UNIX command *df*. Inspect the output generated by the command, and verify that there is a line that indicates the presence of a floppy disk drive (/dev/fd), and another line that indicates the presence of a CD-ROM drive (/cdrom/…).
7. Login as root, and type the UNIX command *format*. The output of this command lists the existing Hard Disk drive(s). Verify that the size(s) of the disk(s) add up to at least 4.2 GB. Specify a disk drive number as requested by the prompt. Then enter '*quit*' after the format menu has been displayed. (Do NOT format the disk).
8. Press the keys labeled 'Stop' and 'A' simultaneously. This will bring up a command line and the text 'ok'. Enter the UNIX command *probe-scsi-all*. Inspect the output of this command, and verify that it lists at least two (2) SCSI channels.
9. Enter '*go*' to get back to the Desktop GUI.
10. Visually inspect the monitor and verify that it is a 20" Sun color monitor, or better.
11. Verify the following through visual inspection:
    - Fifty-three (53) modems (or more).
    - Keyboard and two-button mouse.
    - Two (2) RS-232 ports.
    - SCSI attached 64-port modem server.
    - Modem pool.

2.4.4.1.6 Assumptions and Constraints

None.

2.4.4.1.7 Test Results

Yes	No	
❒	❒	Is the required AVI Master Computer hardware present?
❒	❒	Does the AVI System have a modem pool?

❒ PASS **❒ FAIL** **SwRI:_____Date:_____**

TxDOT:_____Date:_____

2.5 AVI-READ

The AVI Data Processing System interfaces with the AVI Reader Field Sites located throughout San Antonio. This test verifies that the AVI Data Processing System can communicate with the AVI Reader Field sites and can store the data received from them.

2.5.1 Hardware Preparation

- Minimum of three (3) AVI Reader Field Sites installed and in normal operating configuration.
- Minimum of three (3) test vehicles equipped with AVI tags, a driver, and an operator.
- AVI Master Computer in normal operating configuration.
- Workstation with access to the AVI Master Computer.

2.5.2 Software Preparation

AVI Master Computer Software installed and running in operating configuration.

2.5.3 Other Pre-Test Preparation

None.

2.5.4 Test Descriptions

The following test case is implemented under this test:

AVI-READ-1 This test case verifies that the AVI Data Processing System can gather and store data from the AVI Reader Field Sites.

2.5.4.1 AVI-READ-1

This test case verifies that the AVI Data Processing System can gather and store data from the AVI Reader Field Sites.

2.5.4.1.1 Requirements Addressed

AVI-IF-2	The system shall interface to the Reader Field Site.
AVI-IF-2.1	The Modem Pool Subsystem (Modem Pool Subsystem) shall interface with the AVI Reader Field Sites.
AVI-IF-2.2	The Master Computer System Software Subsystem (AVI Master Computer Software) shall interface with the AVI Reader Field Sites.
AVI-FN-1	The AVI Data Processing System shall gather AVI Tag read data from Reader Field Sites.
AVI-FN-1.1	The AVI Master Computer Software shall gather AVI Tag read data from the AVI Reader Field Sites.
AVI-FN-2	The AVI Data Processing System shall process AVI Tag read data.
AVI-FN-2.1	The AVI Master Computer Software shall store the AVI Tag read data collected from the Reader Field Sites.

2.5.4.1.2 Prerequisite Conditions

- Test vehicles stationed at designated locations.
- Test route map and instructions provided to test vehicle drivers.

2.5.4.1.3 Test Inputs

Test inputs will be generated by selected Reader Field Sites as the test vehicles equipped with AVI tags pass by them.

2.5.4.1.4 Test Results Evaluation

As a test vehicle passes a Reader Field Site, the tag identification, reader location, and time will be recorded by the test vehicle operator. The AVI Data Processing System will gather raw tag data from the Reader Field Sites. Reader Field Site data will be compared to data collected by the test operator. This test case will be executed for approximately one (1) hour.

2.5.4.1.5 Test Procedure

1. The test vehicle drivers drive a predetermined test route.
2. The test vehicle operator records the tag identification, speed, and location when passing a Reader Field Site.
3. Continue steps 1 and 2 for approximately one (1) hour.
4. Login to the workstation.
5. Open a window on the workstation.
6. Enter the command *telnet avi*.
7. Login to the AVI Master Computer.
8. Enter the command *cd $HOME/archive*. This command will set the current directory to be the AVI archive directory.
9. Examine the AVI archive file named *tag_archive.Ddd*, where *Ddd* is an abbreviation for the current day of the week.
10. Verify that the data collected from the Reader Field Sites is the same as the data recorded by the operators in the test vehicles.

2.5.4.1.6 Assumptions and Constraints

The Reader Field Site equipment and installation is being provided by another contractor.

2.5.4.1.7 Test Results

Yes	No	
❒	❒	Does the AVI Data Processing System gather raw tag read data indicating tag identifier, time of read, and location of reader?
❒	❒	Does the AVI Data Processing System store the AVI Tag read data collected from the Reader Field Sites?

❒ PASS **❒ FAIL** **SwRI:_____Date:_____**

TxDOT:_____Date:_____

2.6 AVI-CALC

The AVI Data Processing and Filtering process filters AVI tag read data and then calculates and maintains travel time and travel speed data. The AVI DataServer Interface process forwards the travel time and travel speed data to the MDI DataServer. This test verifies that the AVI Data Processing System is capable of calculating and sending travel time and travel speed data to the MDI DataServer.

2.6.1 Hardware Preparation

- MDI DataServer operating in normal configuration.
- AVI Master Computer operating in test configuration.
- Workstation with access to the AVI Master Computer and MDI DataServer.

2.6.2 Software Preparation

- AVI site identifier file containing at least two sites, numbered 1 and 2, which are both enabled.
- AVI site link data file containing at least one entry with the following parameters:

Source Site Identifier:	1
Destination Site Identifier:	2
Threshold:	1.0
Link Identifier:	IE0010I-0410I-HOUST
Link Distance	0.5 miles
Link Nominal Value	30 mph

2.6.3 Other Pre-Test Preparation

None.

2.6.4 Test Descriptions

The following test case is implemented under this test:

AVI-CALC-1 Verifies that the AVI Data Processing System is capable of calculating travel time and travel speed data and is capable of providing travel time and speed data to the MDI DataServer.

2.6.4.1 AVI-CALC-1

This test case verifies that the AVI Data Processing System is capable of calculating travel time and travel speed data and is capable of providing travel time and speed data to the MDI DataServer.

2.6.4.1.1 Requirements Addressed

AVI-IF-1	The system shall interface to the MDI DataServer.
AVI-IF-1.1	The MCS shall interface with the MDI DataServer.
AVI-IF-1.2	The AVI Master Computer Software shall interface with the MDI DataServer.
AVI-FN-2	The AVI Data Processing System shall process AVI Tag read data.
AVI-FN-2.2	The AVI Master Computer Software shall provide travel time and speed data to the MDI DataServer.
AVI-FN-2.3	The AVI Master Computer Software shall process tag read data gathered from

the Reader Field Sites.

2.6.4.1.2 Prerequisite Conditions

- AVI Master Computer Software operating in test configuration.
- Hand calculations for travel time and speed information are complete. Refer to test data contained in Section 2.6.4.1.3 below.

2.6.4.1.3 Test Inputs

The simulator data input file contains one record with the following parameters:

Source Site Identifier:	1
Destination Site Identifier:	2
Distance Between Sites:	0.5 miles
Test Begin Time:	0 seconds
Test End Time:	60 seconds
Tag Generation Minimum Frequency:	10 seconds
Tag Generation Maximum Frequency:	10 seconds
Travel Speed Minimum:	40 mph
Travel Speed Maximum:	40 mph

2.6.4.1.4 Test Results Evaluation

When executed, the simulator application will send simulated tag read data to the AVI Master Computer. The AVI Master Computer Software will summarize the simulated data and calculate travel time and speed information. The MDI DataServer will collect and then store this AVI travel time and speed information. The travel time and travel speed formulas are described below.

Let l be a link between two reader field sites with attributes l_{th}, the link threshold for link l, l_{tt}, the current rolling average travel time for link l, and l_s, the current rolling average speed for link l. Let t_c be the current time and t_w be the duration of the rolling average window in seconds.

Let Ml be the set of all tag matches, m, received for link l. Let each match m have the following attributes: m_t, the time that match m was received, m_{tt}, the travel time measured by match m, and m_s, the speed measured by match m.

Let the current set of valid tag matches, Ml ¢be defined by the following:

$$Ml' = \{m \mid t_c - t_w < m_t < t_c \text{ and } (l_{tt} - l_{tt} \times l_{th}) < m_{tt} < (l_{tt} + l_{tt} \times l_{th})\}$$

The rolling average travel time for link l, l_{tt} ¢and the rolling average speed, l_s ¢can be calculated by the following equations:

$$l_{tt'} = \frac{\sum_{m=1}^{|Ml'|} m_{tt}}{|Ml'|}$$

$$l_{s'} = \frac{\sum_{m=1}^{|Ml'|} m_s}{|Ml'|}$$

A rolling-average example is presented in Appendix A.

When executed, the simulator will generate tag reads for sites 1 and 2. The tag reads and the time the read occurs at each reader are presented in Table 1 and Table 2.

TABLE 1. TAG READS FOR READER 1

TAG IDENTIFIER	READ TIME (SEC)
1	0
2	10
3	20
4	30
5	40
6	50
7	60

TABLE 2. TAG READS FOR READER 2

TAG IDENTIFIER	READ TIME (SEC)
1	45
2	55
3	65
4	75
5	85
6	95
7	105

This set of tag reads will produce a set of tag matches. The matches are presented in Table 3.

TABLE 3. TAG MATCHES

MATCH NUMBER	TAG IDENTIFIER	MATCH TIME	TRAVEL TIME (SEC)	SPEED (MPH)
1	1	45	45	40
2	2	55	45	40
3	3	65	45	40
4	4	75	45	40
5	5	85	45	40
6	6	95	45	40
7	7	105	45	40

From the tag matches and the travel time algorithm, the rolling average travel time and speed can be calculated. The resultant rolling average travel times and speeds, when calculated at 20 second intervals from the time the first tag read is received by the AVI System, are presented in Table 4.

TABLE 4. EXPECTED ROLLING AVERAGE OUTPUT

ELAPSED TIME	ROLLING AVERAGE TIME	ROLLING AVERAGE SPEED
0	60	30[1]
20	60	30
40	60	30
60	45	40
80	45	40
100	45	40
120	45	40

To evaluate the results of the test, the rolling average of the travel time and speed presented in the hand calculations of Table 4 should approximately match the rolling average travel time and speed values reported by the DataServer.

2.6.4.1.5 Test Procedure

1. Login to the workstation.
2. Open a window on the workstation.
3. Telnet to the DataServer Master Computer.
4. Login to the DataServer Master Computer.
5. Enter the command *cd $ATMS/bin*.
6. For the AVI segment being simulated, enter the command *get_avi_data <AVI segment LinkID>* and record the results. This command retrieves the speed and travel time of the selected AVI segment.
7. Open a window on the workstation.

[1] This represents the nominal value.

8. Telnet to the AVI Master Computer.
9. Login to the AVI Master Computer.
10. Enter the command *cd $ATMS/bin*.
11. Enter the command *atp_simulate*. This command will start the flow of simulated data.
12. Switch to the window that is connected to the DataServer Master Computer.
13. For the AVI segment being simulated, enter the command *get_avi_data <AVI segment LinkID>* at approximately 20 second intervals from the time that simulation began and record the results.
14. Verify that the travel time and speed returned are the same values that were obtained through hand calculations in Table 4.

2.6.4.1.6 Assumptions and Constraints

- Simulated data adequately demonstrates the ability of the AVI Data Processing System to calculate travel time and travel speed data.
- The MDI DataServer interface capabilities were verified through the MDI DataServer ATP. Refer to the cross reference matrix located in Section 3 for applicable MDI DataServer test case(s).

2.6.4.1.7 Test Results

Yes	No	
❒	❒	Is speed data calculated accurately?
❒	❒	Is travel time calculated accurately?
❒	❒	Is travel time and speed data provided to the MDI DataServer?

❒ PASS **❒ FAIL** **SwRI:_____Date:_____**

TxDOT:_____Date:_____

2.7 AVI-CONFIG

The AVI user can pass configuration data to the AVI Data Processing System. This test verifies the capability of the AVI Data Processing System to accept, store, and perform configuration operations.

2.7.1 Hardware Preparation

- MDI DataServer operating in normal configuration.
- AVI Master Computer operating in test configuration.
- One AVI Reader Field Site connected to the AVI Master Computer.

2.7.2 Software Preparation

- AVI site identifier file containing at least two sites, numbered 1 and 2, which are both enabled.
- AVI site link data file containing at least one entry with the following parameters:

Source Site Identifier:	1
Destination Site Identifier:	2
Threshold:	1.0
Link Identifier:	IE0010I-0410I-HOUST
Link Distance	0.5 miles
Link Nominal Value	30 mph

2.7.3 Other Pre-Test Preparation

None.

2.7.4 Test Descriptions

The following test case is implemented under this test:

AVI-CONFIG-1	Verifies that the AVI Data Processing System has the capability to configure system components.

2.7.4.1 AVI-CONFIG-1

This test case verifies that the AVI Data Processing System has the capability to configure system components.

2.7.4.1.1 Requirements Addressed

AVI-IF-3	The system shall interface with the user.
AVI-FN-4	The AVI Data Processing System shall allow for configuration of system components.
AVI-FN-4.1	The AVI Master Computer Software shall accept configuration data.
AVI-FN-4.2	The AVI Master Computer Software shall store configuration data.
AVI-FN-4.3	The AVI Master Computer Software shall perform configuration operations.

2.7.4.1.2 Prerequisite Conditions

- AVI Master Computer Software operating in test configuration.
- Hand calculations for travel time and speed information are complete. Refer to test data contained in section 2.7.4.1.3 below.

2.7.4.1.3 Test Inputs

- avi_modem.dat, the Modem Pool Subsystem configuration file.
- avi_link_site.dat, the AVI Reader Field Site/AVI link configuration file.
- avi_site.dat, the AVI Reader Field Site configuration file.
- avi.cfg, the AVI Master Computer Software configuration file.
- The simulator data input file contains two input records. The first record has the following parameters:

Source Site Identifier:	1
Destination Site Identifier:	2
Distance Between Sites:	0.5 miles
Test Begin Time:	0 seconds
Test End Time:	60 seconds
Tag Generation Minimum Frequency:	10 seconds
Tag Generation Maximum Frequency:	10 seconds
Travel Speed Minimum:	40 mph
Travel Speed Maximum:	40 mph

The second record has the following parameters:

Source Site Identifier:	1
Destination Site Identifier:	2
Distance Between Sites:	0.5 miles
Test Begin Time:	60 seconds
Test End Time:	120 seconds
Tag Generation Minimum Frequency:	10 seconds
Tag Generation Maximum Frequency:	10 seconds
Travel Speed Minimum:	60 mph
Travel Speed Maximum:	60 mph

2.7.4.1.4 Test Results Evaluation

Three types of configuration data have been established: Modem Pool Subsystem configuration, AVI Reader Field Site configuration, and AVI Master Computer Software configuration. Elements within each configuration will be modified and the results verified.

For tests requiring simulated data input, the simulator will generate tag reads for sites 1 and 2. The tag reads and the time the read occurs at each reader are presented in Table 1 and
Table 2.

TABLE 5. TAG READS FOR READER 1

TAG IDENTIFIER	READ TIME (SEC)
1	0
2	10
3	20
4	30
5	40
6	50
7	60
8	70
9	80
10	90
11	100
12	110

TABLE 6. TAG READS FOR READER 2

TAG IDENTIFIER	READ TIME (SEC)
1	45
2	55
3	65
4	75
5	85
6	95
7	105
8	115
9	125
10	135
11	145
12	155

This set of tag reads will produce a set of tag matches. The matches are presented in Table 3.

TABLE 7. TAG MATCHES

MATCH NUMBER	TAG IDENTIFIER	MATCH TIME	TRAVEL TIME (SEC)	SPEED (MPH)
1	1	45	45	40
2	2	55	45	40
3	3	65	45	40
4	4	75	45	40
5	5	85	45	40
6	6	95	45	40
7	7	105	30	60
8	8	115	30	60
9	9	125	30	60
10	10	135	30	60
11	11	145	30	60
12	12	155	30	60

From the tag matches and the travel time algorithm, the rolling average travel time and speed can be calculated. The resultant rolling average travel times and speeds for a rolling average of 20 seconds, when calculated at 20 second intervals from the time the first tag read is received by the AVI System, are presented in Table 4.

TABLE 8. EXPECTED ROLLING AVERAGE OUTPUT FOR ROLLING AVERAGE = 20

ELAPSED TIME	ROLLING AVERAGE TIME	ROLLING AVERAGE SPEED
0	60	30[2]
20	60	30
40	60	30
60	45	40
80	45	40
100	45	40
120	30	60
140	30	60
160	30	60
180	30	60

The resultant rolling average travel times and speeds for a rolling average of 60 seconds, when calculated at 20 second intervals from the time the first tag read is received by the AVI System, are presented in Table 4.

[2] This represents the nominal value.

TABLE 9. EXPECTED ROLLING AVERAGE OUTPUT FOR ROLLING AVERAGE = 60

ELAPSED TIME	ROLLING AVERAGE TIME	ROLLING AVERAGE SPEED
0	60	30[3]
20	60	30
40	60	30
60	45	40
80	45	40
100	45	40
120	40	47
140	35	53
160	30	60
180	30	60

2.7.4.1.5 Test Procedure

1. Login to the workstation.
2. Open a window on the workstation.
3. Telnet to the AVI Master Computer.
4. Login to the AVI Master Computer.
5. Enter the command cd *$ATMS/data*. This command will set the current directory to be the AVI data directory.
6. Examine the file named *avi_site.dat*. This file is the AVI Field Site configuration file.
7. Record the identification of a Reader Field Site and change its TransGuide AVI Site Identifier.
8. Save the AVI Field Site configuration file.
9. Examine the file named *avi_link_site.dat*. This file is the AVI Field Site/AVI Link configuration file.
10. Locate the TransGuide AVI Site Identifier that was changed in step 7 and make the same change.
11. Save the AVI Field Site/AVI Link configuration file.
12. Enter the command *cd $ATMS/etc*. This will set the current directory to be the AVI configuration directory.
13. Examine the file named *avi.cfg*. This file is the AVI Master Computer Software configuration file.
14. Record and change the archive file name with the label TAG_ARCHIVE_NAME.
15. Record and change the data interval with the label ROLLING_AVERAGE_WINDOW to 20 seconds and the NOMINAL_TIMEOUT to 3600.
16. Record and change the process name with the label PROCESS_3_NAME.

[3] This represents the nominal value.

17. Save the AVI Master Computer Software configuration file.
18. Move the mouse to the work space.
19. Using the right mouse button, select the AVI Process Status graphical user interface (GUI) from the Work Space Menu.
20. From the AVI Process Status GUI, stop the AVI Master process.
21. From the AVI Process Status GUI, start the AVI Master process.
22. From the AVI Process Status GUI, verify the change in name for process 3 as entered in step 15.
23. From the AVI Process Status GUI menu, select *View*.
24. Select *Detailed Status*.
25. Verify that the AVI Detailed Status GUI displays the Reader Field Site name as entered in step 7.
26. Open a window on the workstation.
27. In the window, telnet to the DataServer Master Computer.
28. Login to the DataServer Master Computer.
29. Enter the command *cd $ATMS/bin*.
30. For the AVI segment being simulated, enter the command *get_avi_data <AVI segment LinkID>* and record the results. This command retrieves the speed and travel time of the selected AVI segment.
31. Open a window on the workstation.
32. In the window, telnet to the AVI Master Computer.
33. Login to the AVI Master Computer.
34. Enter the command *cd $ATMS/bin*.
35. Enter the command *atp_simulate*. This command will start the simulator batch file.
36. Switch to the window that is connected to the DataServer Master Computer.
37. For the AVI segment being simulated, enter the command *get_avi_data <AVI segment LinkID>* at approximately 20 second intervals from the time that the simulation began and record the results.
38. Stop the simulator batch file.
39. From the AVI Process Status GUI, stop the AVI Master process.
40. Verify that the results achieved match the results expected in section 2.7.4.1.4.
41. From the window that is connected to the AVI Master Computer, enter the command *cd $ATMS/etc*.
42. Edit the *avi.cfg* file, and change the ROLLING_AVERAGE_WINDOW to 60.
43. From the AVI Process Status GUI, start the AVI Master process.

44. From the window that is connected to the AVI Master Computer, enter the command *cd $ATMS/bin*.
45. Enter the command *atp_simulate*. This command will start the simulator batch file.
46. Switch to the window that is connected to the DataServer Master Computer.
47. For the AVI segment being simulated, enter the command *get_avi_data <AVI segment LinkID>* at approximately 20 second intervals from the time that the simulation began and record the results.
48. Stop the simulator batch file.
49. From the AVI Process Status GUI, stop the AVI Master process.
50. Verify that the results achieved match the results expected in section 2.7.4.1.4.
51. Enter the command *cd $HOME/archive*.
52. List the contents of the directory. Verify that an archive file exists with the TAG_ARCHIVE_NAME supplied in step 14.
53. Enter the command *cd $ATMS/etc*.
54. Edit the file named *avi.cfg*. Change the entry marked NOMINAL_TIMEOUT to 120.
55. Enter the command *cd $ATMS/bin*.
56. Enter the command *atp_simulate*. This command will start the simulator batch file.
57. Wait 60 seconds, then switch to the window that is connected to the DataServer Master Computer.
58. Verify that the link identifier is active.
59. Switch to the window that is connected to the AVI Master Computer and stop the simulator batch file.
60. Wait 120 seconds. Switch to the window that is connected to the DataServer and verify that the link identifier changes from active to inactive.
61. Switch to the window that is connected to the AVI Master Computer.
62. Enter the command *cd $ATMS/etc*.
63. Edit the file named *avi.cfg*. Change the entry marked NOMINAL_TIMEOUT to 300.
64. Enter the command *cd $ATMS/bin*.
65. Enter the command *atp_simulate*. This command will start the simulator batch file.
66. Wait 60 seconds, then switch to the window that is connected to the DataServer Master Computer.
67. Verify that the link identifier is active.
68. Switch to the window that is connected to the AVI Master Computer and stop the simulator batch file.
69. Wait 300 seconds. Switch to the window that is connected to the DataServer and verify that the link identifier changes from active to inactive.
70. Switch to the window that is connected to the AVI Master Computer and enter the command

cd $ATMS/data.

71. Edit the file named *avi_modem.dat*. This file is the AVI Modem Pool Subsystem configuration file.
72. Select one of the last two modem entries, record the identification of the modem, and change its configuration from enable to disable.
73. Save the AVI Modem Pool Subsystem configuration file.
74. Switch to the AVI Detailed Status GUI window.
75. Bring up the detailed status for readers 1 and 2.
76. Switch to the window that is connected to the AVI Master Computer and enter the command *cd $ATMS/bin*.
77. Enter the command *atp_simulate*.
78. Examine the AVI Detailed Status GUI windows and verify that one reader is receiving data, but the other is not because it is disabled.
79. Stop the simulator batch file.
80. Enter the command *cd $ATMS/data*.
81. Edit the file named *avi_modem.dat*. Change the state of the modem from step 72 from disable to enable.
82. Enter the command *cd $ATMS/bin*.
83. Enter the command *atp_simulate*.
84. Examine the AVI Detailed Status GUI windows and verify that both readers are receiving data.
85. Stop the simulator batch file.

2.7.4.1.6 Assumptions and Constraints

None.

2.7.4.1.7 Test Results

Yes	No	
❒	❒	Does the AVI system interface with the user?
❒	❒	Does the AVI system accept configuration data?
❒	❒	Does the AVI system store configuration data?
❒	❒	Does the AVI Data Processing System perform configuration operations?

❒ PASS **❒ FAIL** **SwRI:_____Date:_____**

TxDOT:_____Date:_____

2.8 AVI-STATUS

The AVI Data Processing System collects status information about the system components and notifies the user of the current status of each component. If an error occurs with one of the system components, the AVI Data Processing System notifies the user. This test verifies the capability of the AVI Data Processing System to process Reader Field Site and AVI Master Computer Software status and error data.

2.8.1 Hardware Preparation

- AVI Master Computer operating in test configuration.
- Workstation with access to the AVI Master Computer.
- One AVI Reader Field Site installed in test configuration.

2.8.2 Software Preparation

- AVI site identifier file containing at least two sites, numbered 1 and 2, which are both enabled.
- AVI site link data file containing at least one entry with the following parameters:

Source Site Identifier:	1
Destination Site Identifier:	2
Threshold:	1.0
Link Identifier:	IE0010I-0410I-HOUST
Link Distance	0.5 miles
Link Nominal Value	30 mph

- AVI communication error simulator program developed.

2.8.3 Other Pre-Test Preparation

None.

2.8.4 Test Descriptions

The following test case is implemented under this test:

AVI-STATUS-1	Verifies that the AVI Master Computer has the capability to detect, record, and report detectable communication errors.
AVI-STATUS-2	Verifies that the AVI Master Computer Software has the capability to monitor its own status.
AVI-STATUS-3	Verifies the capability of the AVI Data Processing System to determine Reader Field Site status.
AVI-STATUS-4	Verifies the capability of the AVI Data Processing System to process Reader Field Site status data.

2.8.4.1 AVI-STATUS-1

This test case verifies that the AVI Master Computer has the capability to detect, record, and report detectable communication errors.

2.8.4.1.1 Requirements Addressed

AVI-FN-5	The AVI Data Processing System shall handle errors.
AVI-FN-5.1	The AVI Master Computer Software shall detect communications errors between itself and the AVI Reader Field Site.

AVI-FN-5.2 The AVI Master Computer Software shall log communications errors between itself and the AVI Reader Field Site.

AVI-FN-5.3 The AVI Master Computer Software shall report communications errors between itself and the AVI Reader Field Site.

2.8.4.1.2 Prerequisite Conditions

AVI Master Computer Software operating in normal configuration.

2.8.4.1.3 Test Inputs

- The simulator data input file contains one record with the following parameters:

Source Site Identifier:	1
Destination Site Identifier:	2
Distance Between Sites:	0.5 miles
Test Begin Time:	0 seconds
Test End Time:	60 seconds
Tag Generation Minimum Frequency:	10 seconds
Tag Generation Maximum Frequency:	10 seconds
Travel Speed Minimum:	40 mph
Travel Speed Maximum:	40 mph

- One (1) test file with six (6) AVI Field Reader Sites messages, as follows:

MESSAGE NUMBER	ERROR TYPE
1	No error.
2	Unknown message type.
3	Internal encoding failure.
4	CRC error in header.
5	CRC error in message.
6	No error.

- The simulator data input file contains one record with the following parameters:

Source Site Identifier:	1
Destination Site Identifier:	2
Distance Between Sites:	0.5 miles
Test Begin Time:	0 seconds
Test End Time:	60 seconds
Tag Generation Minimum Frequency:	10 seconds
Tag Generation Maximum Frequency:	10 seconds
Travel Speed Minimum:	40 mph
Travel Speed Maximum:	40 mph

2.8.4.1.4 Test Results Evaluation

The Master Computer will detect, record, and report the following communication errors:

ERROR CONDITION	ERROR MESSAGE
Unknown message type.	DCM:eval_msg() Message w/unknown code received. code=<code #>
Internal encoding failure.	DCM:confirm_xlat() 0xF2 not followed by 0xF2 or 0xF3 in msg from RFS <RFS #> w/seq # <sequence #>
CRC error in header.	DCM:eom_check() CRC error in header for msg from RFS <RFS #>
CRC error in message.	DCM:eom_check() CRC error in message for msg from RFS <RFS #>
No modem communication.	DCM:init_modem() Modem not responding (in state <state #>) on port <port name>
Modem communication disrupted.	DCM:init_modem() Modem connection lost on port <port name>

When detected, these communication errors are recorded in an error log file by the AVI Master Computer. Seven (7) error log files are maintained, one for each day of the week. These error log files have two fields: the time the error was logged, and the error message. An element in the error message corresponds to an individual field unit.

2.8.4.1.5 Test Procedure

1. Login to the workstation.
2. Open a window on the workstation.
3. Telnet to the AVI Master Computer.
4. Login to the AVI Master Computer.
5. Move the mouse to the work space.
6. Using the right mouse button, select the AVI Process Status GUI from the Work Space Menu.
7. From the AVI Process Status GUI, stop the AVI master process.
8. Enter the command *cd $ATMS/log*. This command will set the current directory to be the AVI log directory.
9. Enter the command *rm avi.Ddd*, where *Ddd* is the day of the week (i.e., Mon, Tue, Wed). This command will delete the contents of the error log file for the given day.
10. From the AVI Process Status GUI, start the AVI master process.
11. From the window that is connected to the AVI Master Computer, enter the command *cd ATMS/bin*.
12. Record the time and enter the command *atp_comm_err*. This command will start the AVI communication error simulator. Wait for the simulator to complete.
13. Enter the command *atp_simulate*.
14. Record the time and disconnect the telephone line from one of the last two active modems in the Modem Pool.
15. From the AVI Process Status GUI, stop the AVI master process.

16. Record the time and remove on of the last two modems from the Modem Pool.
17. From the AVI Process Status GUI, start the AVI master process.
18. Wait for approximately two (2) minutes.
19. Switch to the window that is connected to the AVI Master Computer and enter the command *cd $ATMS/log*. This command will set the current directory to be the AVI log directory.
20. Examine the file named *avi.Ddd* were *Ddd* is the current day of the week (i.e., Mon, Tue, Wed).
21. Verify that the communication errors are recorded in the error log file.

2.8.4.1.6 Assumptions and Constraints

None.

2.8.4.1.7 Test Results

Yes	No	
❒	❒	Did the AVI Master Computer detect detectable communication errors?
❒	❒	Did the AVI Master Computer record communication errors?
❒	❒	Did the AVI Master Computer report detectable communication errors?

❒ PASS **❒ FAIL** **SwRI:_____Date:_____**

TxDOT:_____Date:_____

2.8.4.2 AVI-STATUS-2

This test case verifies the capability of the AVI Master Computer Software to monitor its own status.

2.8.4.2.1 Requirements Addressed

AVI-IF-3	The system shall interface with the user.
AVI-IF-3.1	The AVI Master Computer Software shall interface with the user.
AVI-FN-3.2	The AVI Master Computer Software shall monitor its own status.

2.8.4.2.2 Prerequisite Conditions

None.

2.8.4.2.3 Test Inputs

None.

2.8.4.2.4 Test Results Evaluation

The AVI Master Computer Software will monitor its applications and restart its applications. The AVI Master Computer Software consists of the following processes:

- Master
- Data Processing and Filtering
- Status Logger
- Data Communication and Monitoring
- DataServer Interface
- Heartbeat

When the AVI Master Computer Software detects an inactive process it immediately initiates a restart of the process. A change in process time, date, and identification will signify the restarting of a previously inactive process.

2.8.4.2.5 Test Procedure

1. Login to the workstation.
2. Open a window on the workstation.
3. Telnet to the AVI Master Computer.
4. Login to the AVI Master Computer.
5. Move the mouse to the work space.
6. Using the right mouse button, select the AVI Process Status GUI from the Work Space Menu.
7. Using the AVI Process Status GUI, review the status of the AVI Master Computer Software applications. Note the time, date, and process identification for each process displayed.
8. Switch to the window that is connected to the AVI Master Computer.
9. Enter the command *kill ####*. Where #### represents a process identifier as chosen from the AVI Process Status GUI.
10. Using the AVI Process Status GUI, note the change in date, time, and process identifier for the

process that was killed.

2.8.4.2.6 Assumptions and Constraints

None.

2.8.4.2.7 Test Results

Yes	No	
❒	❒	Does the AVI Master Computer interface with the user?
❒	❒	Does the AVI Master Computer Software monitor its own status?

❒ PASS **❒ FAIL** **SwRI:_____Date:_____**

TxDOT:_____Date:_____

2.8.4.3 AVI-STATUS-3

This test case verifies the capability of the AVI Data Processing System to determine Reader Field Site status.

2.8.4.3.1 Requirements Addressed

AVI-IF-3	The system shall interface with the user.
AVI-IF-3.1	The AVI Master Computer Software shall interface with the user.
AVI-FN-3.1	The AVI Master Computer Software shall determine AVI Reader Field Site status.

2.8.4.3.2 Prerequisite Conditions

Reader Field Site connected to AVI Master Computer and in "OK" status.

2.8.4.3.3 Test Inputs

None.

2.8.4.3.4 Test Results Evaluation

The AVI Detailed Status GUI displays the last known status of each AVI Reader Field Site. AVI Reader Field Site status is as follows:

- OK — Line connected and no errors.
- Disabled — AVI Master Computer Software ignoring Reader Field Site.
- Not connected — Reader Field Site not connected.
- Error — Last transaction contained an error.
- Warning — No activity for fifteen (15) minutes.
- Resetting — Sent reset command.

The frequency at which the AVI Data Processing System collects data can be configured for each AVI Reader Field Site.

2.8.4.3.5 Test Procedure

1. Login to the workstation.
2. Open a window on the workstation.
3. Move the mouse to the work space.
4. Using the right mouse button, select the AVI Process Status GUI from the Work Space Menu.
5. From the AVI Process Status GUI Select *View*.
6. Select *Detailed Status*.
7. Verify that the AVI Detailed Status GUI displays the status of the Reader Field Site as OK.
8. From the AVI Detailed Status GUI, select Configure/Disable All.
9. Verify that the AVI Detailed Status GUI displays the status of the Reader Field Site as Disabled.
10. From the AVI Detailed Status GUI, select Configure/Reset All.
11. Verify that the AVI Detailed Status GUI displays the status of the Reader Field Site as

Resetting.

12. Wait for the Reader Field Site status to return to OK.
13. Disconnect the Reader Field Site from the modem.
14. Verify that the AVI Detailed Status GUI displays the status of the Reader Field Site as Not Connected.
15. Reconnect the Reader Field Site to the modem and select Configure/Reset All.
16. Wait for the Reader Field Site status to return to OK.
17. Power down the Reader Field Site.
18. Verify that the AVI Detailed Status GUI displays the status of the Reader Field Site as Not Connected.
19. Power up the Reader Field Site.
20. Run a tag past the Reader Field Site.
21. Wait approximately fifteen (15) minutes.
22. Verify that the AVI Detailed Status GUI displays the status of the Reader Field Site as Warning.
23. Using test case AVI-STATUS-1, send simulated data containing a communication error(s) to the AVI Master Computer.
24. Verify that the AVI Detailed Status GUI displays the status of the Reader Field Site as Error.

2.8.4.3.6 Assumptions and Constraints

None.

2.8.4.3.7 Test Results

Yes	No	
❒	❒	Does the AVI Master Computer interface with the user?
❒	❒	Does the AVI Master Computer determine AVI Reader Field Site status?

❒ PASS **❒ FAIL** **SwRI:_____Date:_____**

TxDOT:_____Date:_____

2.8.4.4 AVI-STATUS-4

This test case verifies the capability of the AVI Data Processing System to process Reader Field Site status data.

2.8.4.4.1 Requirements Addressed

AVI-IF-3	The system shall interface with the user.
AVI-IF-3.1	The AVI Master Computer Software shall interface with the user.
AVI-FN-3	The AVI Data Processing System shall process status data.

2.8.4.4.2 Prerequisite Conditions

Reader Field Site displays "OK" status.

2.8.4.4.3 Test Inputs

The simulator data input file contains one record with the following parameters which will cause the simulator to generate 50 simulated tag reads:

Source Site Identifier:	1
Destination Site Identifier:	2
Distance Between Sites:	0.5 miles
Test Begin Time:	0 seconds
Test End Time:	51 seconds
Tag Generation Minimum Frequency:	1 seconds
Tag Generation Maximum Frequency:	1 seconds
Travel Speed Minimum:	40 mph
Travel Speed Maximum:	40 mph

2.8.4.4.4 Test Results Evaluation

AVI Reader Field Site statistics are collected and maintained by the AVI Master Computer. The Detailed Reader Field Site Status GUI displays the following Reader Field Site statistics:

- Status — Last known Reader Field Site status.
- Connect Time — Date and time of initial connection.
- Last Update — Date and time of last update.
- Port — Assigned modem port number from configuration file.
- Read Count — Total number of tag read counts since connect time.
- Error Count — Total number of errors received since connect time.
- Tag Data — Display of most recent tag read data.

The Detailed Reader Field Site Status GUI provides the capability to manually disable or reset the AVI Reader Field Site.

2.8.4.4.5 Test Procedure

1. Login to the workstation.
2. Open a window on the workstation.
3. Telnet to the AVI Master Computer.

4. Login to the AVI Master Computer.
5. Move the mouse to the work space.
6. Using the right mouse button, select the AVI Process Status GUI from the Work Space Menu.
7. From the AVI Process Status GUI, stop the AVI master process.
8. From the AVI Process Status GUI Select *View*.
9. Select *Detailed Status*.
10. Using the mouse, select Reader Field Site number 1. This will display the Detailed Reader Field Site Status GUI for this Reader Field Site.
11. From the window that is connected to the AVI Master Computer, enter the command *cd $ATMS/bin*.
12. Enter the command *atp_simulate*.
13. Wait approximately two (2) minutes.
14. Verify that the tag read data is displayed on the Detailed Reader Field Site Status GUI.
15. Verify that the displayed last update date and are correct.
16. Verify that the displayed read count is fifty (50).
17. Wait approximately two (2) minutes.
18. Verify that the error count is incremented by one (1).

2.8.4.4.6 Assumptions and Constraints

None.

2.8.4.4.7 Test Results

Yes	No	
❒	❒	Does the AVI Master Computer interface with the user?
❒	❒	Does the AVI Data Processing System process status data?

❒ PASS **❒ FAIL** **SwRI:_____Date:_____**

TxDOT:_____Date:_____

3. REQUIREMENTS TRACEABILITY

The traceability matrix for the MDI AVI System is presented in this section. It lists the requirements of the system that were presented in Section 2 of this document. Along with each requirement is the source of the requirement and the test case that verifies the requirement. This table is based on the traceability matrix from the AVI MDI Preliminary Design Document. This table was used throughout the design, development, and test of the system to ensure that the requirements have been met. It was continually updated as requirements and design elements were refined. The requirements in the traceability matrix are organized by requirement number. The interface requirements are presented first, followed by the functional and physical requirements. Test cases annotated with the system mnemonic *DS* are contained in the DataServer ATP.

Requirement Number	**Requirement**	**Source**	**Test Case(s)**	**Verification Method**
AVI-IF-1	The system shall interface to the MDI DataServer.	Design	DS-AVI-02 AVI-CALC-1	Demonstration
AVI-IF-1.1	The MCS shall interface with the MDI DataServer.	AVI-IF-1	DS-AVI-02 AVI-CALC-1	Demonstration
AVI-IF-1.2	The AVI Master Computer Software shall interface with the MDI DataServer.	AVI-IF-1	DS-AVI-02 AVI-CALC-1	Demonstration
AVI-IF-2	The system shall interface to the Reader Field Site.	Design	AVI-READ-1 AVI-CONFIG-1	Demonstration
AVI-IF-2.1	The Modem Pool Subsystem shall interface with the AVI Reader Field Sites.	AVI-IF-2	AVI-READ-1 AVI-CONFIG-1	Demonstration
AVI-IF-2.2	The AVI Master Computer Software shall interface with the AVI Reader Field Sites.	AVI-IF-2	AVI-READ-1 AVI-CONFIG-1	Demonstration
AVI-IF-3	The system shall interface with the user.	Design	AVI-CONFIG-1 AVI-STATUS-2 AVI-STATUS-3 AVI-STATUS-4	Demonstration
AVI-IF-3.1	The AVI Master Computer Software shall interface with the user.	AVI-IF-3	AVI-STATUS-2 AVI-STATUS-3 AVI-STATUS-4	Demonstration
AVI-FN-1	The AVI Data Processing System shall gather AVI Tag read data from Reader Field Sites.	R 24 S8 P 2.2 P6 S2	AVI-READ-1 AVI-STATUS-2	Demonstration
AVI-FN-1.1	The AVI Master Computer Software shall gather AVI Tag read data from the AVI Reader Field Sites.	P 2.2 P6 S1 P 2.2.2.3 AVI-FN-1	AVI-READ-1 AVI-STATUS-2	Demonstration
AVI-FN-2	The AVI Data Processing System shall process AVI Tag read data.	R 24 S8 P 2.2 P6 S2	AVI-READ-1 AVI-STATUS-2 AVI-CALC-1	Analysis

Requirement Number	Requirement	Source	Test Case(s)	Verification Method
AVI-FN-2.1	The AVI Master Computer Software shall store the AVI Tag read data collected from the Reader Field Sites.	R 24 S8 R 25.4.2 S1 R 25.4.2 S2 AVI-FN-2	AVI-READ-1 AVI-STATUS-2 AVI-CALC-1	Demonstration
AVI-FN-2.2	The AVI Master Computer Software shall provide travel time and speed data to the MDI DataServer.	R 25.4.2 S1 R 25.4.2 S2 P 2.2 P6 S1 AVI-FN-2	DS-AVI-02 AVI-CALC-1	Demonstration
AVI-FN-2.3	The AVI Master Computer Software shall process tag read data gathered from the Reader Field Sites.	R 25.4.2 S1 P 2.2 P6 S1 P 2.2.2.3.1 AVI-FN-2	AVI-CALC-1	Analysis
AVI-FN-3	The AVI Data Processing System shall process status data.	P 2.2.1 P1 S3	AVI-STATUS-4	Demonstration
AVI-FN-3.1	The AVI Master Computer Software shall determine AVI Reader Field Site status.	P 2.2.1 P1 S7 AVI-FN-3	AVI-STATUS-3	Demonstration
AVI-FN-3.2	The AVI Master Computer Software shall monitor its own status.	P 2.2.1 P1 S3 AVI-FN-3	AVI-STATUS-2	Demonstration
AVI-FN-4	The AVI Data Processing System shall allow for configuration of system components.	P 2.2.1 P1 S6	AVI-CONFIG-1	Demonstration
AVI-FN-4.1	The AVI Master Computer Software shall accept configuration data.	P 2.2.2.1 P1 S6 AVI-FN-4	AVI-CONFIG-1	Demonstration
AVI-FN-4.2	The AVI Master Computer Software shall store configuration data.	P 2.2.2.1 P1 S6 AVI-FN-4	AVI-CONFIG-1	Demonstration
AVI-FN-4.3	The AVI Master Computer Software shall perform configuration operations.	P 2.2.2.1 P1 S6 AVI-FN-4	AVI-CONFIG-1	Demonstration
AVI-FN-5	The AVI Data Processing System shall handle errors.	P 2.2.1 P1	AVI-STATUS-1	Demonstration
AVI-FN-5.1	The AVI Master Computer Software shall detect communications errors between itself and the AVI Reader Field Site.	P 2.2.1 P1 S3 AVI-FN-5	AVI-STATUS-1	Demonstration

Requirement Number	Requirement	Source	Test Case(s)	Verification Method
AVI-FN-5.2	The AVI Master Computer Software shall log communications errors between itself and the AVI Reader Field Site.	P 2.2.1 P1 S3 AVI-FN-5	AVI-STATUS-1	Demonstration
AVI-FN-5.3	The AVI Master Computer Software shall report communications errors between itself and the AVI Reader Field Site.	P 2.2.1 P1 S3-4 AVI-FN-5	AVI-STATUS-1	Demonstration
AVI-PY-1	The AVI Data Processing System shall have a dedicated master computer.	R 25.4.6 S1	AVI-PYS-1	Demonstration Inspection
AVI-PY-1.1	The AVI Master Computer shall be a Sun Microsystems Ultra SPARCStation or better	R 25.4.6 S1 P 2.2.2.3.4 P1 S2 AVI-PY-1	AVI-PYS-1	Demonstration Inspection
AVI-PY-1.2	The AVI Master Computer shall have, at a minimum, the following items: • 167mhz SPARC CPU • 4.2 GB Hard Disk • 128 MB RAM • Floppy Disk Drive • Sun CD-ROM drive • Turbo GX+ Graphics card • 20” Sun color monitor • 2 Ethernet cards • 2 SCSI channels • 2 RS-232 ports • Keyboard • 2-Button mouse • 64 serial ports (SCSI attached) • 1 modem/site	R 25.4.7 S1 P 2.2.2.3.4 P1 S2 AVI-PY-1	AVI-PYS-1	Demonstration Inspection
AVI-PY-2	The AVI Data Processing System shall have a modem pool.	Design	AVI-PYS-1	Demonstration Inspection

APPENDIX A: ROLLING-AVERAGE WINDOW

A *tag match* is produced whenever a tag is received by an adjacent pair of reader sites that are defined as a source-destination pair in the configuration file. Tag matches are stored in a table along with the time that they were received and the travel time and speed measured for the tag as it passed between the two readers. Table 10 shows an example of a table for link identifier IN0035I-RANDO-WALZE, which is one (1) mile in length.

TABLE 10. TAG MATCH TABLE FOR LINK IN0035I-RANDO-WALZE

MATCH NUMBER	TAG IDENTIFIER	TIME	TRAVEL TIME (SEC)	SPEED (MPH)
1	189	10:05:00	65	55
2	94	10:05:02	54	67
3	256	10:05:10	66	55
4	343	10:05:11	64	56
5	984	10:05:19	62	58
6	598	10:05:25	56	64
7	501	10:05:28	60	60
8	402	10:05:35	69	52
9	639	10:05:39	59	61
10	54	10:05:42	68	53
11	798	10:05:44	90	40
12	603	10:05:52	61	59
13	402	10:06:03	53	68
14	609	10:06:09	54	67
15	799	10:06:20	58	62

Periodically, the average travel time and speed for each link are calculated using a rolling-average algorithm. Two parameters are used to control the function of this algorithm: the *rolling-average window* and the *link threshold*.

The rolling-average window is used to determine the period of time that should be considered when calculating the rolling-average. For example, if the rolling-average window is 60 seconds, only the tag matches received in the past 60 seconds will be used to calculate the rolling average. The average that is produced from this calculation would be referred to as a *60-second rolling-average*.

The second parameter, the link threshold, is used to filter tag matches. For example, if the link threshold is 20%, any match which is 20% greater or less than the previous rolling-average travel time will not be included in the calculation.

The rolling-average is calculated by taking the sum of all tag matches which were recorded within the past rolling-average window and which have travel time values that fall within the link threshold. This sum is then divided by the number of matches that were included in the sum.

Example 1

Assume that the current time is 10:05:20, the tag match table for link IN0035I-RANDO-WALZE is as presented in Table 10, and the previous calculation for the rolling-average travel time was 59 seconds. Using a rolling-average window of 20 seconds and a threshold of 20%, all matches received since 10:05:00 with a travel time between 47.2 seconds and 70.8 seconds will be considered. This produces the following equation:

$$M_l = \{1, 2, 3, 4, 5, 6, 7, 8, 9, 10, 11, 12, 13, 14, 15\}$$

$$Ml' = \{1, 2, 3, 4, 5\}$$

$$|Ml'| = 5$$

$$l_{tt} = \frac{\sum_{m=1}^{5} m_{tt}}{5} = 62.2$$

EQUATION 1. CALCULATION OF ROLLING-AVERAGE TRAVEL TIME FOR EXAMPLE 1

The link rolling-average speed, l_s, can be calculated in a similar fashion by replacing the match travel time, m_{tt}, with the match speed, m_s. This would produce a rolling-average speed of 58.2 mph.

APPENDIX B: AVI DATA SIMULATOR

The AVI Data Simulator program is used to simulate the operation of an AVI Reader Field Site. This program dials the AVI Master Computer and sends tag read data based on the data contained in an input file. Multiple copies of the simulator can be executed simultaneously to simulate multiple readers. In this configuration, the simulator can be used to generate tag matches that the AVI Master Computer Software can process.

There are two steps to using the simulator. First, a data file must be generated that is used as input to the simulator itself. Second, the simulator must be executed using the input file that is created in the first step.

The date file generator program accepts an input file that contains records that describe the data file that should be generated. Any number of records may be in the input data file. Each record is processed in the order that it appears in the input file. Each record is limited to a single line, although the record may wrap to the next line. No other text, such as comments, are allowed.

The input file record must have the following fields: *<source site #> <dest site #> <distance> <begin time> <end time> <freq min> <freq max> <speed min> <speed max>*. These are defined below.

<source site #> <dest site #>	These are the reader field site "source" #'s used by the AMTECH equipment.
<distance>	The is the distance over the AVI link defined by the source and destination. It is a floating point number for the distance in miles.
<begin time> <end time>	This is the time period over which to generate the data for this record. Times are relative to the start of the test and the send program will take this value as an offset to when it is started to determine when to send the actual record.
<freq min> <freq max>	The frequency range over which to send the data. e.g., 5 5 sends data every 5 seconds; 10, 20 sends the next record between 10 and 20 seconds from the previous record.
<speed min> <speed max>	The range of speed values in MPH. To get a constant value put in the same value twice, e.g., 50, 50.

The data generator program generates records in pairs. The first record is generated at the *<begin time>*. The corresponding record for the destination site is generated next, based on the speed and distance at the required time. Then, the time of the next record from the source is determined, and another pair is generated. This means the records may be generated out of order and the file must be sorted using the command *sort -k 1n,1n -o <outfile> <infile>*.

Once the data generator program has generated the data file, the simulation program can be executed. The send program is keyed to the source # and two copies must be run to generate tag matches. Each copy of the simulation process generates tag reads for only one of the readers.